STRUCTURAL AND ELECTRICAL WORKING DRAWING

PROPOSED 3MVA BITCOIN MINING SITE

Location:

OGBINBIRI COMMUNITY, BAYELSA SATE.

Client:

MR. MAKIR

STRUCTURAL ENGINEER

CORNERSTONE UNIQUE ENGINEERING

Consultant Engineers, Contractor and Project Manager.

194, Ibrahim Taiwo Road, Ilorin, Kwara State.

Phone: *+23480-6942-4519*

AUGUST, 2024

You created this PDF from an application that is not licensed to print to novaPDF printer (http://www.novapdf.com)

STRUCTURAL AND ELECTRICALDESIGN SPECIFICATION AND GENERAL NOTE

1. All measurements are in millimeter
2. Assumed soil bearing pressure is 200kN/m2 .
3. Grade 20 concrete(mix ratio 1:2:4) which shall develop minimun compressive strenght of 25kN/m in 28 days should be used for all reinforced concrete and concrete mix 1:3:6 for strip footing and concrete blinding .
4. High yield reinforcement of minimum tensile strenght 410 kN/m should be used.
5. Assumed soil condition - Firm gravelly lateritic clay soil.
6. All lappings should be minimum of 600mm.
7. Minimum of 16mm High yield mild steel rod for the column and minimum of 10mm rod for Stirup Bars is advisable to be use on site.
8. The depth of the foundation should be determine by Site Engineer or Supervisor which due to natural ground elevation/gradient and nature.
9. Minimum 150mm D.P.C. Concrete thick, BRC Fabric Wire Mesh, A193 (Optional) and should be lapped minimum of 300mm, 0.5-1mm Polythene sheet and Minimum 150mm Hard-core filling to meet Site Engineer's specification.
10. Abbreviation used are: T1, T2, B1 & B2 denotes Top, Near Top , Near Top Bottom & Bottom.
11. Norminal concrete cover of 40mm minimum for sub-structure and 20mm for all super-structure (Slab, Beams, Column e.t.c) concrete works.
12. Engineer shall not be held responsible for jobs not supervised by him | her if there is any structural failure.
13. All drawings are to be read in conjuction with relevant architectural drawings.
14. Soil bearing capacity assumed for design is 150kN/m .
15. Fire resistance: One hour for all element
16. Intended use of structure: Residential
17. Relevant Code: B.S. 6399: Part 1:1984; B.S. 8110: Part 1:1997; B.S. 8110: Part 2:1985

NOTES SEE FIRST (1) PAGE FOR GENERAL NOTE	PROJECT TITLE: **PROPOSED 3MVA BITCOIN MINING SITE** FOR MR. MAKIR AT OGBINBIRI COMMUNITY, BAYELSA STATE.	STRUCTURAL ENGINEER **CORNERSTONE UNIQUE ENGINEERING** Consultant Engineers, Contractor and Project Manager. **194, Ibrahim Taiwo Road, Ilorin, Kwara State.** **Phone: +23480-6942-4519**	DESIGNED BY : ENGR, I. O. ALIYU DRAWN BY : ENGR, I. O. ALIYU CHECKED BY : ENGR, IBRAHIM, A.O. DRAWING TITLE : **SPECIFICATION AND GENERAL NOTE**	PAGE NO. : 001 DATE : **AUGUST, 2024.** SCALE : **NTS**	ENGINEER'S SEAL AND SIGNATURE :	

You created this PDF from an application that is not licensed to print to novaPDF printer (http://www.novapdf.com)

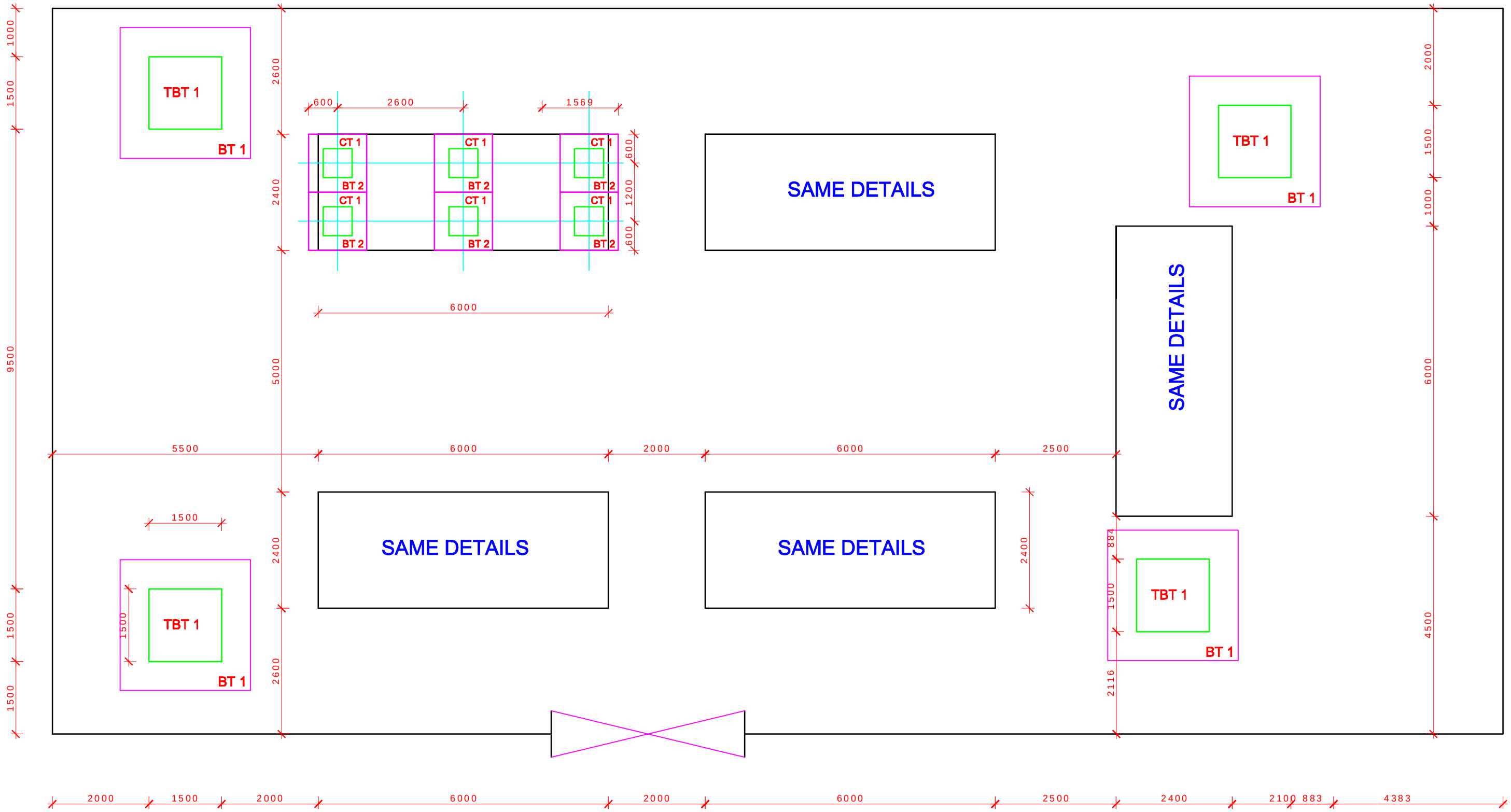

NOTES	PROJECT TITLE:	STRUCTURAL ENGINEER		PAGE NO. :	ENGINEER'S SEAL AND SIGNATURE :
SEE FIRST (1) PAGE FOR GENERAL NOTE	**PROPOSED 3MVA BITCOIN MINING SITE** FOR MR. MAKIR AT OGBINBIRI COMMUNITY, BAYELSA STATE.	**CORNERSTONE UNIQUE ENGINEERING** Consultant Engineers, Contractor and Project Manager. **194, Ibrahim Taiwo Road, Ilorin, Kwara State.** **Phone: +23480-6942-4519**	DESIGNED BY : ENGR, I. O. ALIYU DRAWN BY : ENGR, I. O. ALIYU CHECKED BY : ENGR, IBRAHIM, A.O.	002	
			DRAWING TITLE : **GENERAL ARRANGEMENT**	DATE : **AUGUST, 2024.**	SCALE : **NTS**

You created this PDF from an application that is not licensed to print to novaPDF printer (http://www.novapdf.com)

The type of the foundation designed is **PAD** Foundation.
The **DEPTH** of the foundation should or will be determine on site by **Site Engineer** or **Supervisor** regarding the gradient of the soil depth

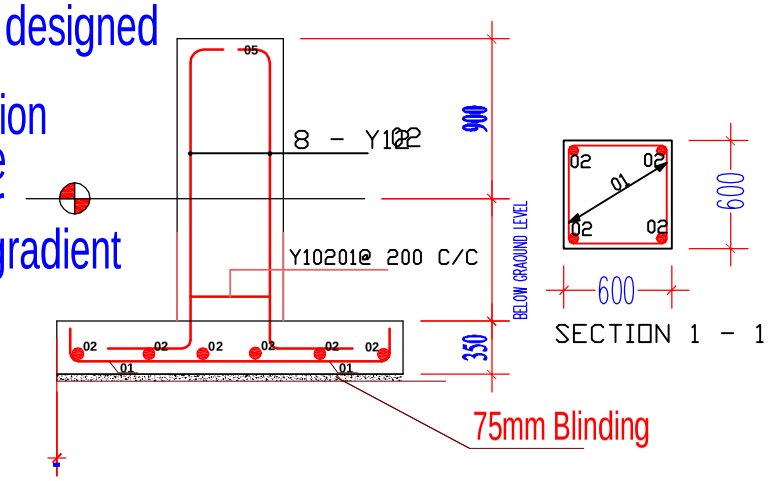

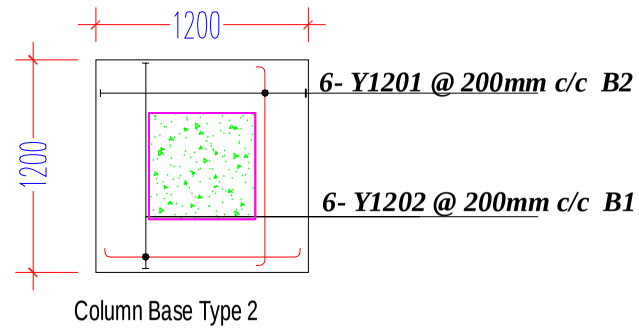

TYPICAL COMPREHENSIVE DETAILING OF SHORTH COLUMN BASE SECTION FOR SINGLE COLUMNS

The type of the foundation designed is **PAD** Foundation.
The **DEPTH** of the foundation should or will be determine on site by **Site Engineer** or **Supervisor** regarding the gradient of the soil depth

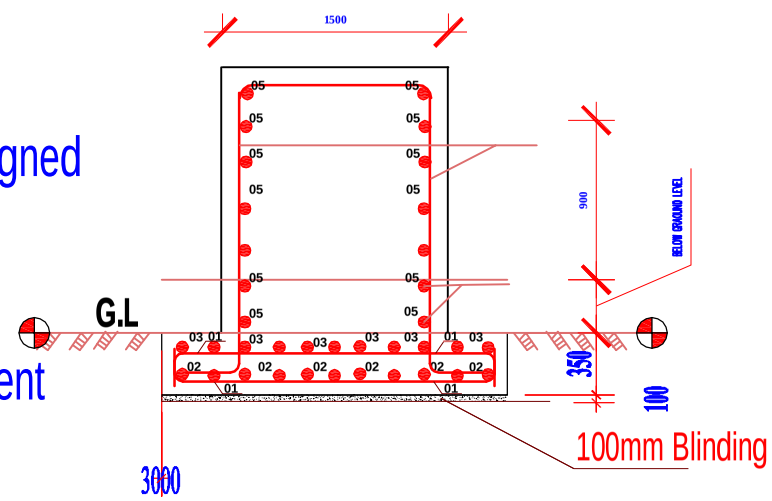

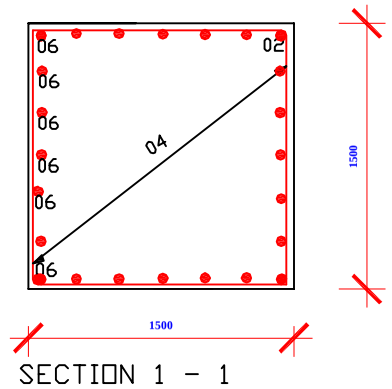

TYPICAL COMPREHENSIVE DETAILING OF TRANSFORMER BASE SECTION

NOTES	PROJECT TITLE:	STRUCTURAL ENGINEER		PAGE NO. :	ENGINEER'S SEAL AND SIGNATURE :
SEE FIRST (1) PAGE FOR GENERAL NOTE	**PROPOSED 3MVA BITCOIN MINING SITE** FOR MR. MAKIR AT OGBINBIRI COMMUNITY, BAYELSA STATE.	**CORNERSTONE UNIQUE ENGINEERING** Consultant Engineers, Contractor and Project Manager. **194, Ibrahim Taiwo Road, Ilorin, Kwara State.** **Phone: +23480-6942-4519**	DESIGNED BY : ENGR, I. O. ALIYU DRAWN BY : ENGR, I. O. ALIYU CHECKED BY : ENGR, IBRAHIM, A.O. DRAWING TITLE : **COLUMN, COLUMN BASE AND TRASFORMER BASE DETAILS**	003 DATE : **AUGUST, 2024.** SCALE : **NTS**	

You created this PDF from an application that is not licensed to print to novaPDF printer (http://www.novapdf.com)

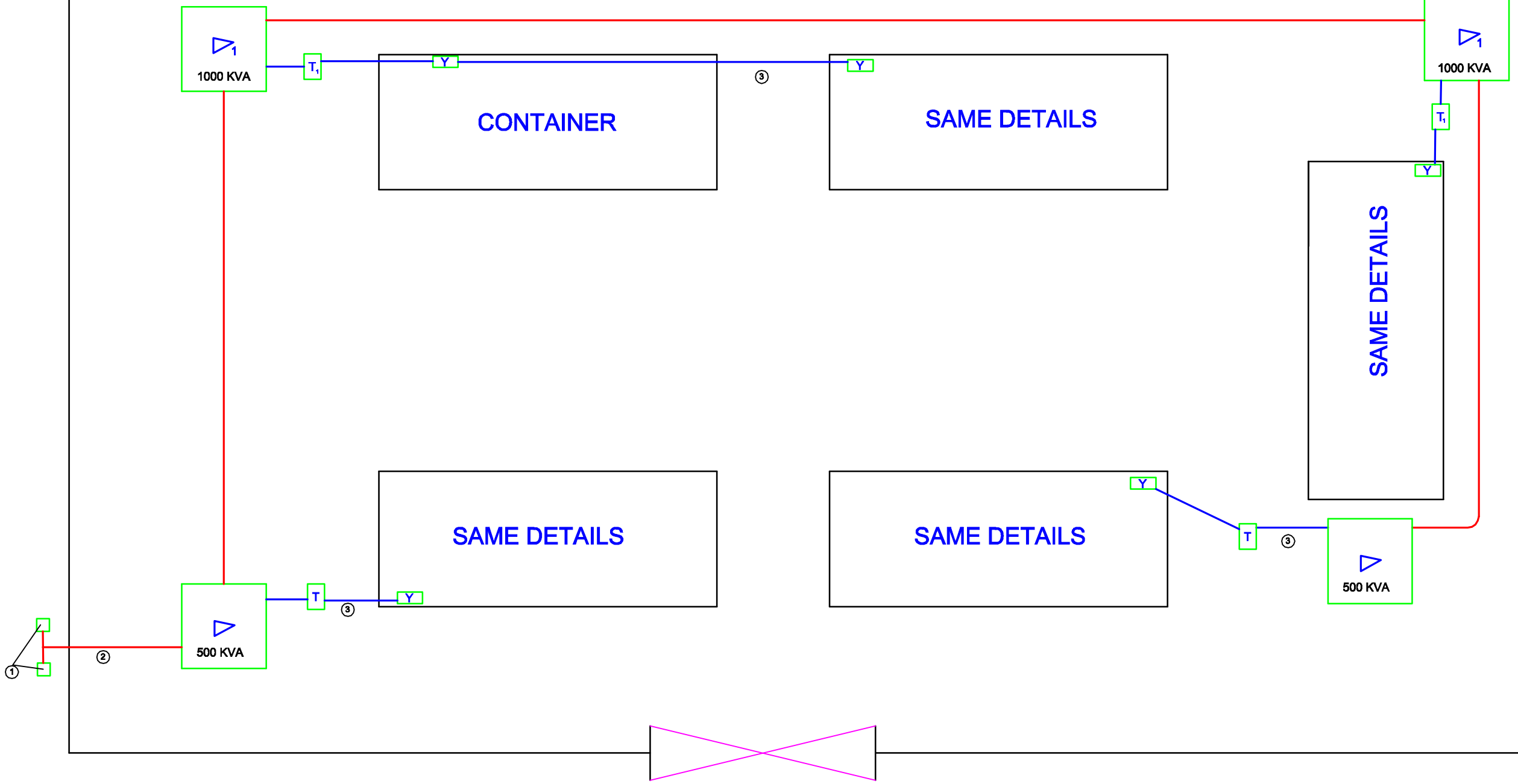

LEGEND

① 11KV H.T Supply entry point
② 150mm Aluminium conductor
③ 3Phase Low Voltage (415v)
Ⓑ 1000KVA 11KV Transformer
Ⓣ 1200A Feeder Pillar
Ⓑ 500KVA 11KV Transformer
Ⓣ 800A Feeder Pillar
Ⓥ 800A Breaker Box, Copper bar, 160A Breaker

NOTES

SEE FIRST (1) PAGE FOR GENERAL NOTE

PROJECT TITLE:

PROPOSED 3MVA BITCOIN MINING SITE

FOR
MR. MAKIR
AT
OGBINBIRI COMMUNITY, BAYELSA STATE.

STRUCTURAL ENGINEER
CORNERSTONE UNIQUE ENGINEERING
Consultant Engineers, Contractor and Project Manager.
194, Ibrahim Taiwo Road, Ilorin, Kwara State.
Phone: +23480-6942-4519

DESIGNED BY :	ENGR, I. O. ALIYU
DRAWN BY :	ENGR, I. O. ALIYU
CHECKED BY :	ENGR, IBRAHIM, A.O.

DRAWING TITLE : **ELECTRICAL ARRANGEMENT AND DETAILS**

PAGE NO. : 004

DATE : **AUGUST, 2024.**

SCALE : **NTS**

ENGINEER'S SEAL AND SIGNATURE :

You created this PDF from an application that is not licensed to print to novaPDF printer (http://www.novapdf.com)